Excellence Without Compromise

EWC CONTROLS INC.

# TECHNICAL BULLETIN

## Models DMX2, DMX4, DMX6 and DMX8

Leave this Bulletin on the job site for future reference

The DMX panel provides intelligent control of forced air zoning systems with up to eight zones using motorized dampers. Practically any off-the-shelf heat/cool thermostat can be used. With such features as automatic changeover, controlling 2-stage gas/electric or heat pump systems, opposite system service, short cycle timers and changeover timers the DMX provides the highest level of performance at an economical cost.

**Zone Capacity**

Controls two zones and may be expanded to four, six or eight zones using one, two or three EX-2 Expansion Panels.

**Compatible HVAC Systems**

Controls single or two-stage gas or oil fired furnaces and electric air conditioning or heat pumps.

**Compatible Thermostats**

Compatible with any single stage heat/cool mechanical or electronic thermostat that operates on 24VAC, battery power or power robbing types that draw less than 25 ma of current. Thermostats must have a switching subbase or a minimum 2ºF deadband.

**Automatic Heat/Cool Changeover**

The DMX panel will automatically detect which zones are calling for heating and cooling and service the system with the greater number of calls. When the same number of zones simultaneously call for heating and cooling, the panel will service heating calls first.

**LED Indicators**

The DMX has a number of LEDs that indicate the status of the HVAC system and the panel. The function of each system LED is described in the Service Guide section.

**Damper LEDs**

LEDs labeled Zone 1 thru Zone 8 indicate which dampers should be open.

**Operating Power**

Operates on 24VAC power supplied from a separate transformer. A single 40VA transformer can power four zones, or a total of 5 dampers.

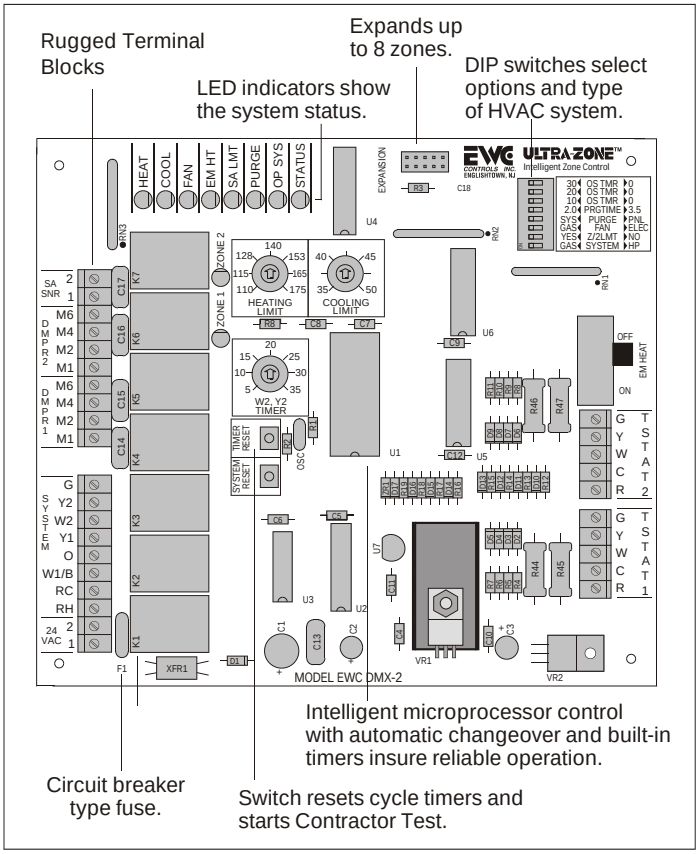


Figure 1. DMX2 panel showing features.

**Thermal Breaker**

The DMX has a thermal circuit breaker in place of a fuse and protects the panel from shorts in the thermostat and damper field wiring. It does not protect against shorts in the system field wiring.

When the circuit breaker is tripped it will get quite hot. To reset the breaker, remove the 24VAC power for approximately 30 seconds.

**Brown-Out Protection**

Brownout detection circuit prevents microcomputer lockup when brownouts occur.

**Indoor Fan Control**

Any zone can activate the indoor fan and only the dampers in zones calling for Continuous fan operation will open. Continuous fan operation will only occur when there are no heating or cooling calls.



EWC Controls Inc• 385 Highway 33• Englishtown, NJ 07726• 800-446-3110• FAX 732-635-8646 • E-Mail-info@ewccontrols.com

## DIP SWITCHES

### Selecting the HVAC System

DIP switch 1 selects a gas/electric or heat pump system.

| | |
|---|---|
| GAS ON 1 HP | Set the switch to the ON position for gas/electric systems. |
| GAS ON 1 HP | Set the switch to the off position for heat pump systems. |

Figure 2. DIP switch selects type of HVAC system.

### Limiting Second Stage When Less than Half the Zones are Calling

DIP switch 2 selects whether second stage heat or cool will be used, when fewer than half of the total zones are calling for heating or cooling.

| | |
|---|---|
| YES ON 2 NO | Set the switch to the ON position to enable the Stage/2 option. |
| YES ON 2 NO | Set the switch to the off position to disable the Stage/2 option. |

Figure 3. DIP switch selects Stage/2 option.

### Indoor Fan Control During Heating

DIP switch 3 selects whether or not the indoor fan is activated by the panel during heating calls, as well as cooling calls.

| | |
|---|---|
| GAS ON 3 ELEC | Set the switch to the off position to activate the fan during a heating or cooling call. (I.E. Electric Heat) |
| GAS ON 3 ELEC | Set the switch to the ON position to activate the fan only during a cooling |

Figure 4. DIP switch selects fan control.

### Select System or Panel Controlled Purge Control

DIP switch 4 selects whether the HVAC system or the panel, controls the indoor fan to purge heating or cooling at the end of a call. DIP switch 5 selects the amount of time delay the indoor fan operates at the end of a call, when the panel controls the purge operation.

| | |
|---|---|
| 2.0 ON 5 3.5<br>SYS ON 4 PNL | Set switch 4 to the ON position to select system purge control. Switch 5 has no effect. |
| 2.0 ON 5 3.5<br>SYS ON 4 PNL | Set switch 4 to the off position to select panel control of the purge cycle. Set switch 5 to ON to select a 2-minute purge time or off to select a 3.5-minute cycle. |

Figure 5. DIP switches select purge cycle control.

### Setting Opposite System Service Timing

Switches 6, 7 and 8 set the maximum call time before the system switches to service zones calling for the opposing system, even though there may be more calls for the active system. Setting all the switches to 0 (off) turns the opposing system feature off. The panel will service zones based on whether there are more zones calling for heating or cooling.

You can select 10, 20 or 30 minutes by selecting the corresponding switch to ON or you can set multiple switches to ON. If all the switches are set to ON, the opposite system timer is one hour.

| | |
|---|---|
| 30 ON 8 0<br>20 ON 7 0<br>10 ON 6 0 | Setting switches 6, 7 and 8 to the off positions disables the opposite system service. The panel will service Zones based on whether there are more heating or cooling calls only. |
| 30 ON 8 0<br>20 ON 7 0<br>10 ON 6 0 | Setting switch 7 to ON and switches 6 and 8 to off, would set the opposite system timer to 20 minutes of continuous call before it would switch to the opposite mode. |
| 30 ON 8 0<br>20 ON 7 0<br>10 ON 6 0 | Setting switch 6 and 7 to ON and switch 8 to off, would set the opposite system timer to 30 minutes. |

Figure 6. DIP switches set the opposite system timer.

### Setting the Stage Two Timer

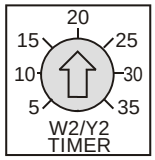


Second stage heating and cooling is controlled by the amount of time stage one has been continuously calling. The potentiometer on the board sets the amount of time first stage must call before second stage heating or cooling is activated.

### Setting the Heating Limit

If the supply air sensor is not used, a factory supplied and installed 10K ohm resistor should be left in the SNR terminals. Heating limit should be set to 170 and cooling limit set to 36. Remove the resistor when using the supply air sensor.

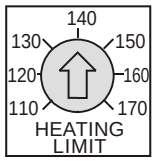


When the optional supply air sensor is used, the heating potentiometer sets the highest temperature the supply air can reach in heating before the heating is cycle off to prevent the furnace sensors from tripping.

### Setting the Cooling Limit

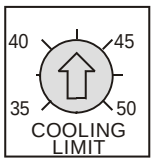


When the optional supply air sensor is used, the cooling potentiometer sets the lowest temperature the supply air can reach in cooling before the cooling is cycle off to prevent indoor coil freeze-up.

### Emergency Heat Switch

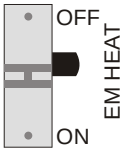


The Emergency Heat switch disables the heat pump compressor during heating calls and activates second stage heating (W2) when the switch is set to the ON position.

### Timer Reset BUTTON


Momentarily pressing the TIMER RESET button clears the built-in timers controlling the minimum call time, off time, changeover time and the opposing system timer. This enables you to test the installation faster.

### System Reset BUTTON


Momentarily pressing the SYSTEM RESET button resets the computer.

### Built-In Timer Settings

The panel has built-in timers that insure reliable operation.

| | |
|---|---|
| Short Cycle Timer | 2 minutes, fixed |
| Minimum Call Timer | 2 minutes, fixed |
| Changeover Timer | 5 minutes, fixed |
| Opposing System Service Timer | 0 to 60 minutes, Adjustable |
| Second Stage Timer | 5 to 35 minutes, Adjustable |

### Minimum Run Timer

When a call is activated the panel will run the system in that mode for a minimum of 2 minutes.

### Short Cycle Timer

When the system is satisfied the panel will not resume the same call for a minimum of 2 minutes.

### Changeover Timer

A built-in timer prevents the system from rapidly switching between heating and cooling. At the end of a call, a five-minute timer is started and the panel will not switch to the opposing system until the time out is complete.

# INSTALLATION INSTRUCTIONS

*All wiring should be done to local and national codes and ordinances. Use color-coded, multi-conductor wire. Wire number to number or letter to letter on each control.*

*WARNING: THESE PANELS ARE DESIGNED FOR USE WITH 24VAC. DO NOT USE OTHER VOLTAGES! USE CAUTION TO AVOID ELECTRIC SHOCK OR EQUIPMENT DAMAGE.*

### Thermostat Wiring

Practically any single stage heat/cool thermostat can be used with the DMX panel. A typical thermostat installation is shown below.

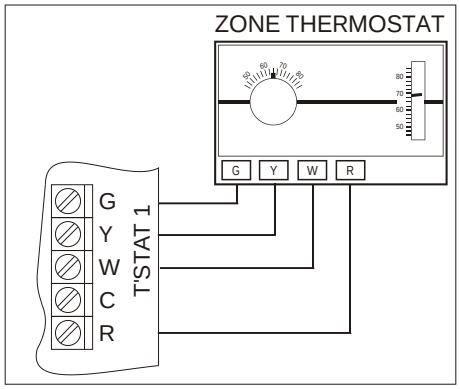


Figure 7a. Typical thermostat wiring.

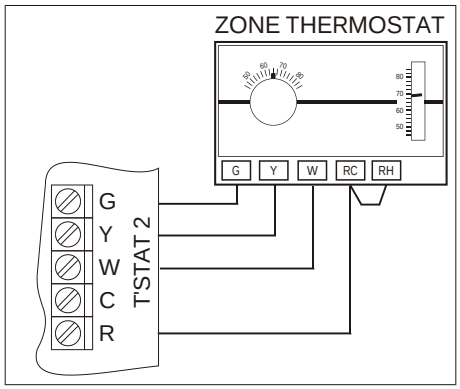


Figure 7B.

### HVAC System Wiring

On the DMX panel, the fan (G) and the compressor (Y1 and Y2) are powered by the RC terminal, and the heating (W1/B and O) are powered by the RH terminal.

### Single Transformer Systems

Typical gas/electric system wiring using a single transformer is shown below. Be sure to add a jumper wire between RC and RH as shown.

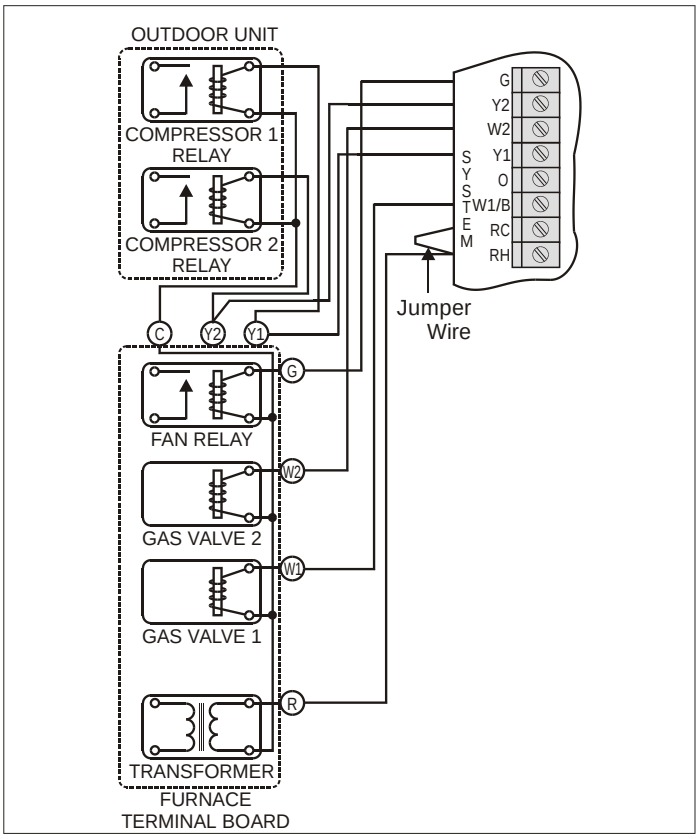


Figure 8a. Single transformer gas/electric system.

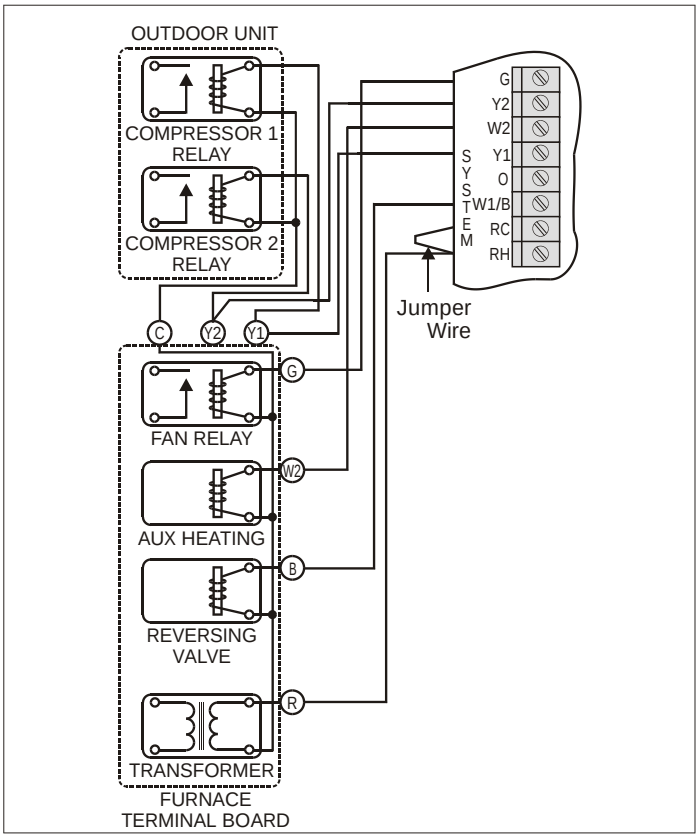


Figure 8b. Single transformer heat pump system.

## Two Transformer Systems

Wiring diagram for a typical oil burner or hot water coil heating with electric cooling. No jumper wire is required between RC and RH.

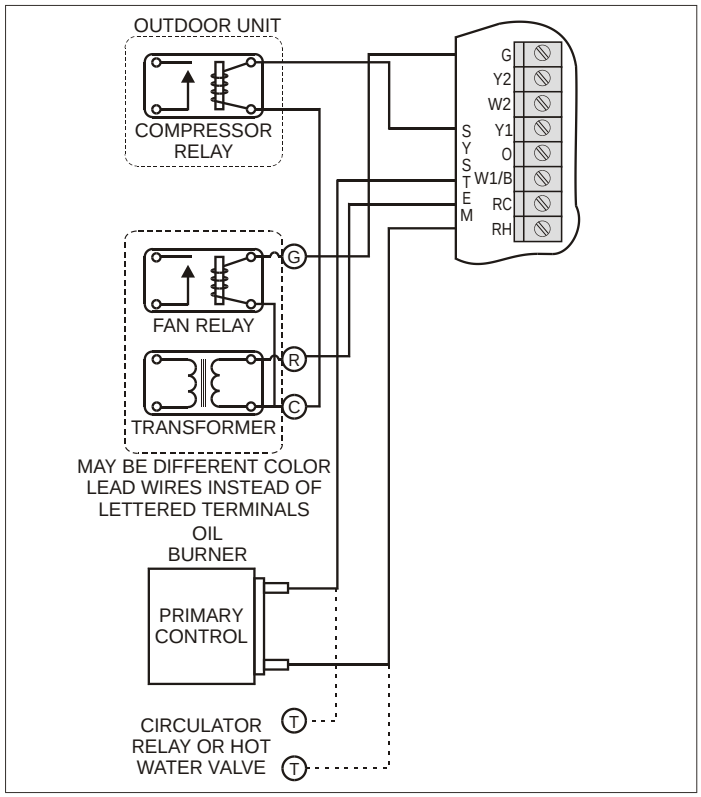


Figure 8c. Two-transformer oil burner with electric cooling.

## SMD/BMD Damper Wiring

A single SMD/BMD damper motor is wired to the M1, M4 and M6 terminals as shown in figure 9a.

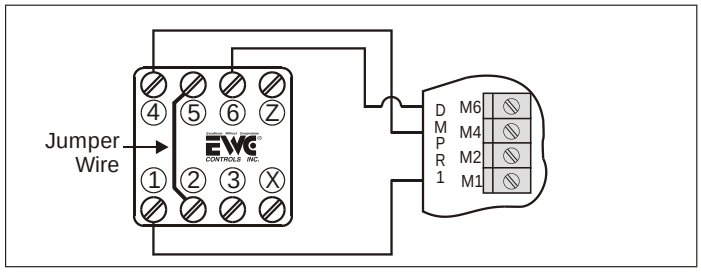


Figure 9a. A zone controlling one SMD/BMD damper.

## Wiring Two SMD/BMD Dampers

Wiring two rectangular damper motors controlled by one zone is shown in figure 9b.

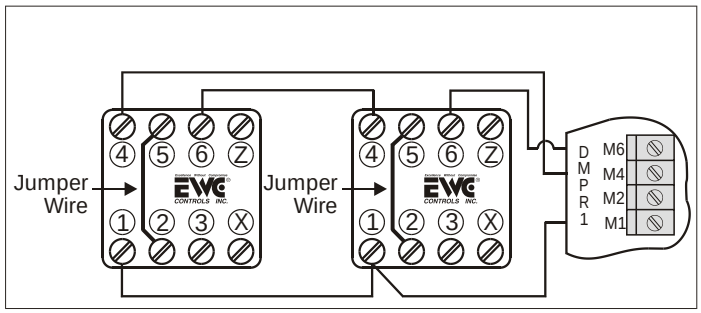


Figure 9b. A zone controlling two SMD/BMD dampers.

## Damper Wiring

Model URD & ND Dampers Wiring of a single damper to one zone.

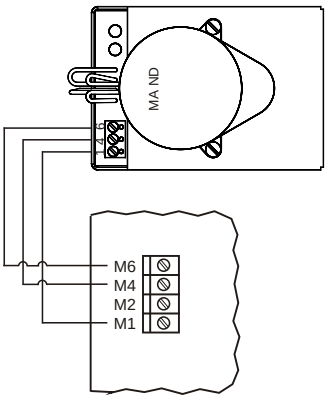


Dampers with open/closed LED indicators. Model ND & URD wiring of multiple dampers in parallel off of one zone.

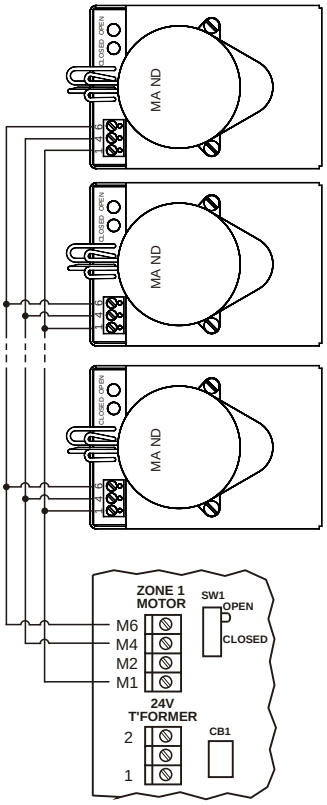


Note: All zone dampers stroke to the "open" position, when all zones are satisfied and the HVAC system is idle!

### Controlling 3 or More SMD/BMD Dampers From One Zone

A relay can be added to the system to control more than two dampers per zone. The figure below shows a relay used to control four dampers using the "R4" relay which has four sets of contacts (4-pole) with both normally open and normally closed contacts. If more than four dampers are required on a single zone, a second R4 relay must be used.

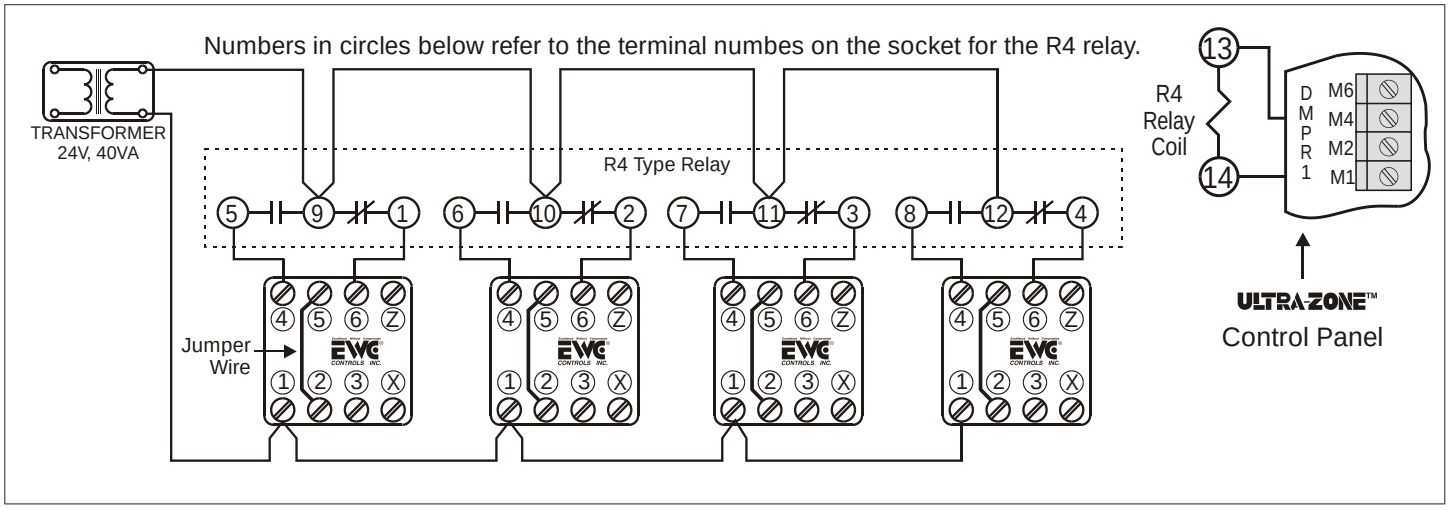


A zone controlling four SMD/BMD dampers using the R4 relay.

## RDN/SMDL

The damper motor terminals (M1, M2, M4 and M6) will accommodate practically any 24VAC motorized damper. Damper motor selection should be limited to motors with less than .5 amp current draw.

Terminal M1 -

Terminal M2 -

Terminal M4 -

Terminal M6 -

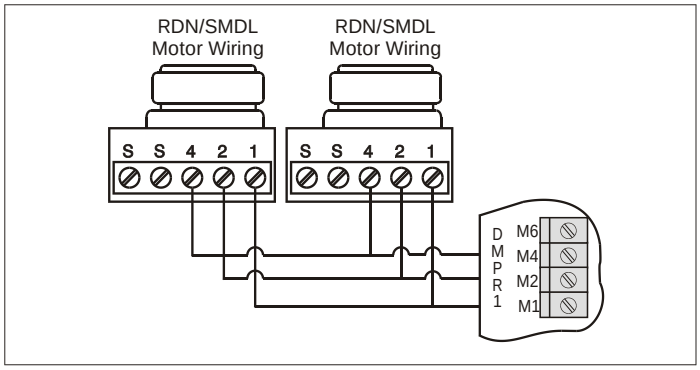


Figure 11a. A zone controlling two RDN/SMDL dampers.

## Model RDN & SMDL

Model RDN & SMDL operate off of constant voltage. Voltage on terminals 1 & 2 will drive the damper closed. This voltage should always be on the motor. Then when voltage is supplied to terminal 4 the motor will open. As a voltage check, you will read 24VAC on terminals 1 & 2 and also 1 & 4.

## 24VAC Power Wiring

A single 24VAC, 40VA transformer can power the DMX panel and one EX-2 expansion panel with one damper on each zone. It is important that the 24VAC terminals 1 and 2 be wired the same as shown in figure 12.

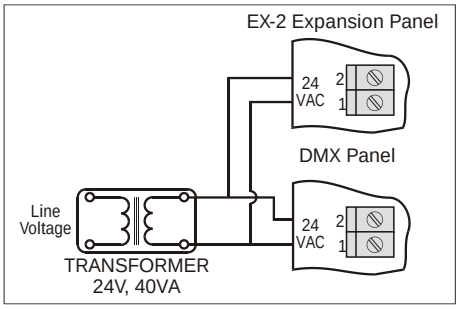


Figure 12. 24VAC power wiring.

## NDSR/URD-SR Motor Wiring

Figure 8 shows how to wire a spring return damper. A power close style damper is wired M1 & M6. Power open style damper is wired to M1 & M4.

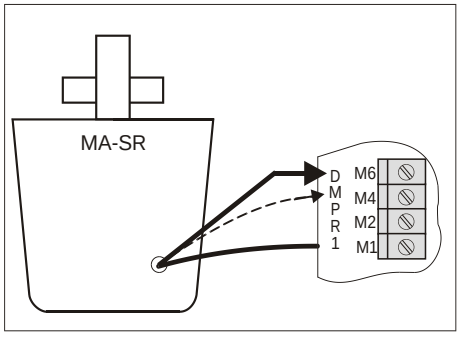


Figure 11b. Wiring spring return damper.

Wiring Multiple dampers on one zone is done in parallel. One 40VA transformer will power 5 dampers.

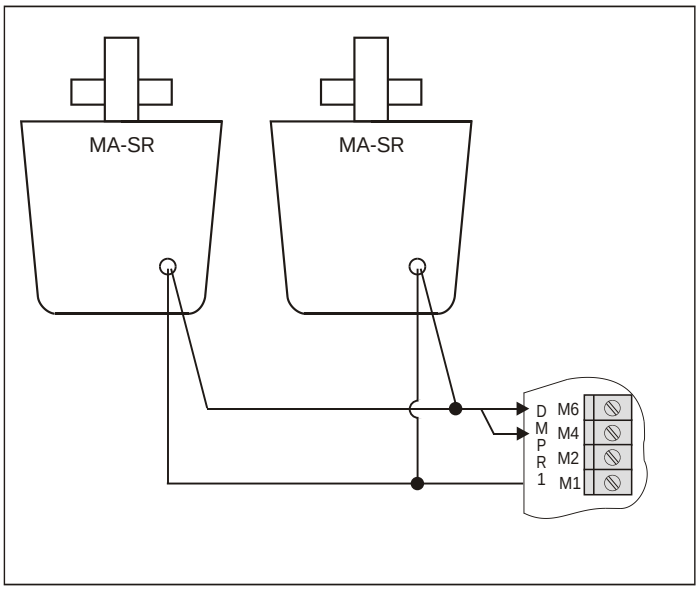


Figure 11c.


EWC Controls Inc.• 385 Highway 33 • Englishtown, NJ 07726• 800-446-3110 • FAX 732-635-8646 •E-Mail- info@ewccontrols.com

## Setting the Expansion Panel DIP Switches

Each expansion panel has a 5-position DIP switch that must be set as shown in figure 10 to insure the panel operates properly.

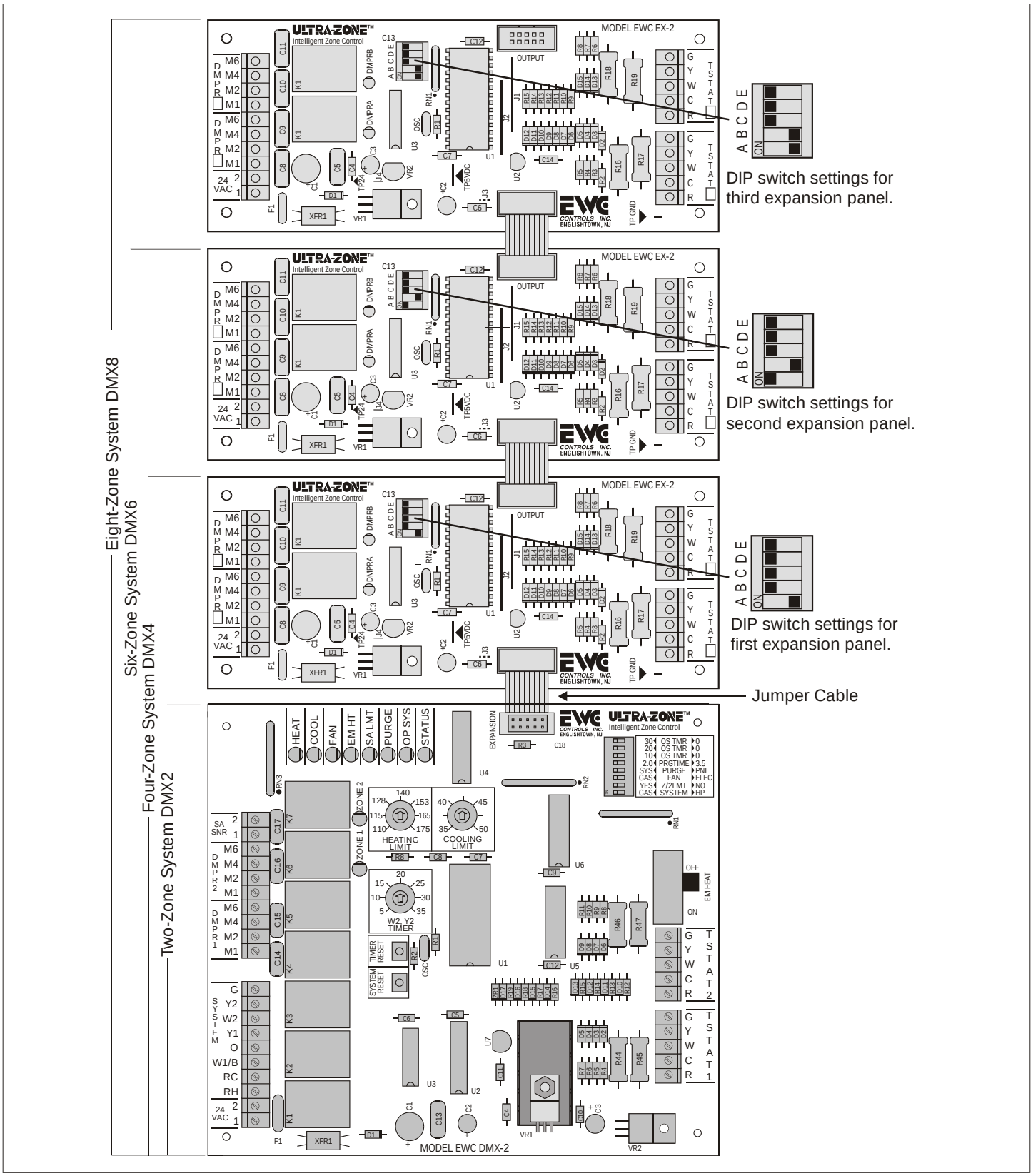


Figure 10. Proper connection and DIP switch settings for an eight-zone system.

# SERVICE GUIDE

**Some Helpful Guidelines**

All voltage measurements on the panel. At the damper terminals and thermostat terminals, should be made with the ground lead of your meter on terminal 1 of the 24VAC input terminals.

All VAC measurements at the HVAC system terminals (W, Y & G) should be made with the meter ground lead on the system's C terminal at the HVAC system.

Caution! The thermal fuse (F1) gets very hot when a short occurs in the 24VAC wiring on the panel. Always use caution when checking the fuse.

When measuring 24VAC, the voltage can vary from 22 to 28VAC.

**Using the LED Indicators**

There are a number of LED indicators that indicate the status of the panel and HVAC system.

**STATUS** The STATUS LED blinks slowly to indicate the microcomputer is operating properly. If the LED is continuously off it could indicate that the panel does not have power, is in the Contractor Test or the microcomputer needs to be reset.

**OP SYS** The OP SYS LED indicates when the panel is in the opposite system mode.

**PURGE** The PURGE LED indicates that the panel is in a purge cycle.

**SA LMT** The SA LMT LED indicates that the supply air temperature has exceeded the high or low supply air temperature limit. The LED blinks if the supply air sensor is open or shorted.

**EM HT** The EM HT LED indicates that the emergency heat mode is active.

**FAN** The FAN LED indicates that the panel has turned the indoor fan on.

**HEAT** The HEAT LED indicates that the panel is calling for heating. The LED is steady when first stage is on, it blinks when second stage heating is on.

**COOL** The COOL LED indicates that the panel is calling for cooling. The LED is steady when first stage is on, it blinks when second stage cooling is on.

**Check 24VAC Power**

You should measure 24VAC at all damper M2 terminals and all thermostat R terminals.

You should measure +5VDC at the 5V test point (see figure 11 for location) and +24VDC at the 24V test point.

See Table 1 if any of these voltages are not present.

**Dampers Not Responding Properly**

If the ZONE1 and ZONE2 LED indicators are responding properly, but the dampers appear to be malfunctioning, check that the dampers are wired correctly.

If the ZONE1 and ZONE2 LEDs are not responding properly, check the calls on each zone thermostat. If the calls indicate a damper should be activated and is not, press the TMR RESET switch to reset the timers.

If the problem persists, see Table 2 for trouble shooting help.

**HVAC System Not Responding Properly**

If the HEAT, COOL and FAN LED indicators are responding properly, but the system appears to be malfunctioning, check that the HVAC system is wired correctly.

If the HEAT, COOL or FAN LED is not responding properly, check the calls on each zone thermostat. If the calls indicate an HVAC call should be activated and is not, press the TMR RESET switch to reset the timers.

If the problem persists, see Table 3.

| Table 1. Detecting 24VAC Shorts and Loss of +5VDC or +24VDC | | | |
|---|---|---|---|
| Detecting 24VAC Short | The STATUS LED will be off, you will measure 24VAC at the transformer terminal 2, but not at any damper M2 terminal or any zone thermostat R terminal. The thermal fuse will be very hot. | | If the short still persists disconnect all the wires at each damper (M1, M2, M4 & M6). If the short dis-appears, check the damper wiring and the damper motors.<br><br>If the short still persists, call Technical Support. |
| Isolating 24VAC Shorts Panel or Wiring | Remove the wire at each zone thermostat R terminal and test if the short still persists. If the short dis-appears, check the zone thermostat wiring and the damper wiring. | Detecting Loss of +24VDC or +5VDC | The +5VDC and +24VDC can be measured at the test points shown in figure 13. If either voltage is not correct, disconnect the jumper cable connecting the panel and the first expansion panel. |
| Isolating 24VAC Shorts DMX or EX-2 Panels | Remove the power to the panel and all expansion panels (if present) and allow the fuse to cool. Disconnect the jumper cable between the panel and the first expansion panel. Re-power the panel. If the short persists, call Technical Support. | | If the voltage problem dis-appears, check that the 24VAC power is wired to the correct terminals (terminal 1 to 1 and terminal 2 to 2 as shown in figure 12). If the problem still persists, call Technical Support. |

| Table 2. Detecting Damper Problems | | | |
|---|---|---|---|
| Damper LED On But Damper Not Responding | Check the damper wiring to insure it is correctly wired. Be sure the wires are secured in the terminals. Test the damper motor to insure it is properly operating. If the problem still persists, call Technical Support. | | 24VAC power to insure the expansion panel is powered and check that the jumper cables are installed properly.<br><br>Check the voltage at each zone thermostat terminal W, Y and G terminals to insure the damper should be activated.<br><br>If the problem still persists, call Technical Support. |
| DMX2 Damper LED Not Responding | Check that the STATUS LED is blinking. If it is not, the panel may have been placed in the Contractor Test inadvertently by holding the TMR RESET switch for 15 seconds. Press the SYSTEM RESET switch to cancel the Contractor Test.<br><br>Press the TMR RESET switch to clear any timers that may be keeping the call off, and the damper from not responding.<br><br>Check the voltage at each zone thermostat terminal W, Y and G terminals to insure the damper should be activated.<br><br>If the problem still persists. Call Technical Support. | Testing a Damper Motor | For a round damper, connect 24VAC common to terminal 1 and 24VAC to terminals 2 and 4. The damper should open. Remove 24VAC from terminal 4 and the damper should close.<br><br>For a SMD/BMD damper, connect 24VAC common to terminal 1 and 24VAC to terminal 4 and the damper should open. Remove 24VAC from terminal 4 and apply 24VAC to terminal 6 and the damper should close. Be sure there is a jumper between terminals 5 and 2.<br><br>For a power close spring return damper, connect 24VAC to the two wires, and the damper should CLOSE. Remove the 24VAC and the damper should OPEN. For a power open damper the action will be reversed. |
| EX-2 Damper LED & Damper Not Responding | If the damper is on an expansion panel, check the DIP switch settings on each expansion panel to insure they are properly set. Check the | | |

Call Technical Support @ 1-800-526-4048

| Table 3. Trouble Shooting Heating, Cooling and Fan Problems | |
|---|---|
| **LEDs On But System Not Responding** | Check the HVAC wiring to insure it is correctly wired. Be sure the wires are secured in the terminals. Check that there is 24VAC at the RC and RH terminals. Use the HVAC system common (C) for the ground lead of your meter. Check that RH and RC are jumpered if the system uses a single transformer.<br><br>You can test the HVAC system by shorting terminals R and W together to activate the heater, RC to Y to activate the compressor and RC to G to activate the fan. |
| **LEDs and System Not Responding** | Check that the STATUS LED is blinking to insure the computer is operating properly. Press the SYSTEM RESET switch if it is not.<br><br>Press the TMR RESET switch to clear the timers that may be preventing the call, changeover delay or opposite system timing. |
| | If the system still does not respond, measure the voltage at each zone thermostat terminal W, Y & G to insure they are correct and a call is in order. |
| **Measuring Thermostat Voltages** | Heat/Cool thermostats will apply 24VAC to the W terminal during a heating call.<br><br>During a cooling call, 24VAC is applied to both Y and G.<br><br>During a continuous fan call, 24VAC is applied to the G terminal.<br><br>Be sure the RC and RH terminals at the thermostats are jumpered together. |

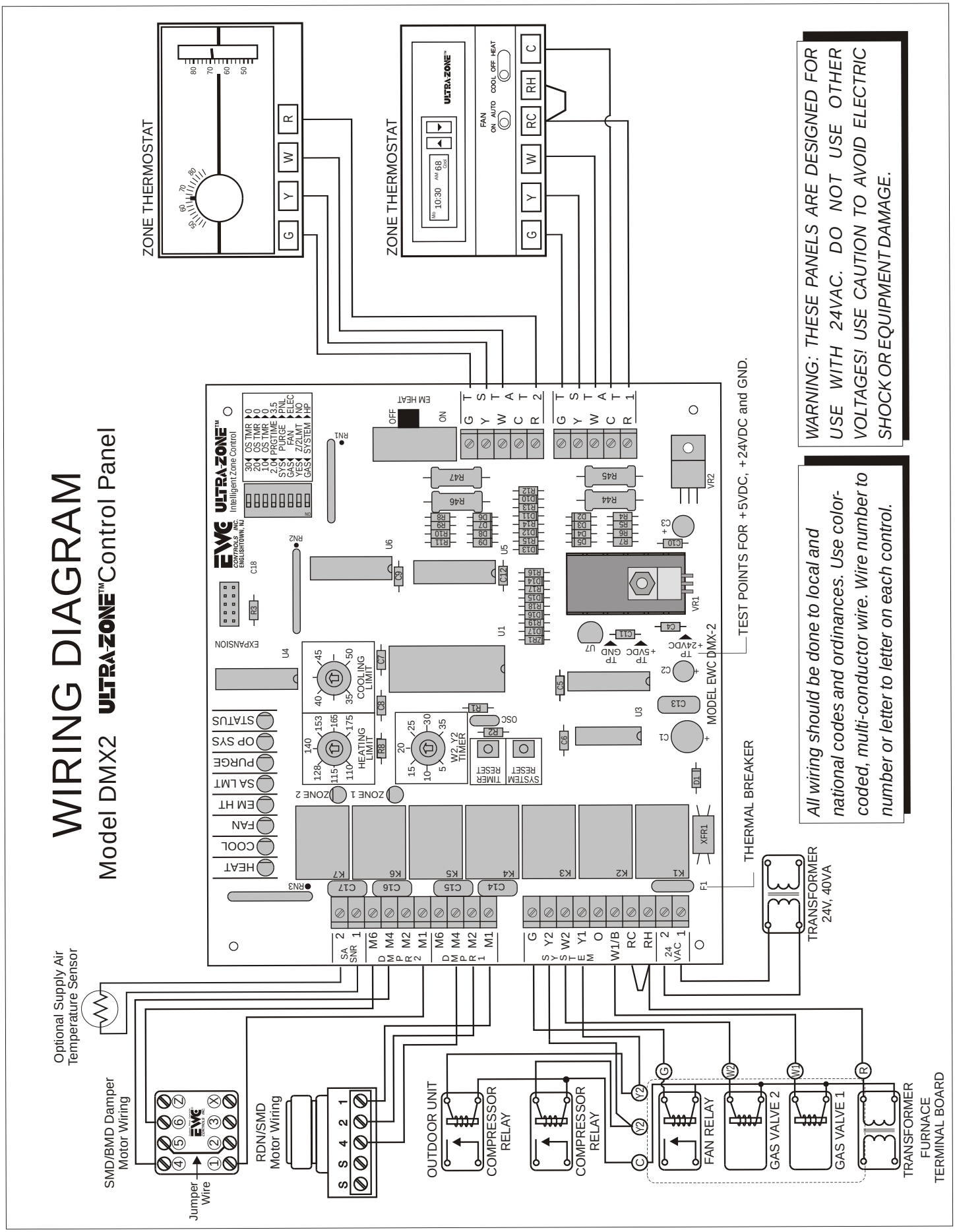


Figure 13. DMX2 wiring diagram.